DS-2CD2186G2-I(SU)

8 MP AcuSense Powered-by-Darkfighter Fixed Dome Network Camera



Empowered by deep learning algorithms, Hikvision AcuSense technology brings human and vehicle targets classification alarms to front- and back-end devices. The system focuses on human and vehicle targets, vastly improving alarm efficiency and effectiveness.

- High quality imaging with 8 MP resolution
- Excellent low-light performance via powered-by-DarkFighter technology
- Efficient H.265+ compression technology
- Clear imaging against strong back light due to 120 dB true WDR technology
- Focus on human and vehicle targets classification based on deep learning
- Built-in microphone for real-time audio security (-SU)
- Audio and alarm interface available(-SU)
- Water and dust resistant (IP67) and vandal resistant (IK10)

▪ Specification

Camera	
Image Sensor	1/1.8" Progressive Scan CMOS
Shutter Speed	1/3 s to 1/100,000 s
Min. Illumination	Color: 0.003 Lux @ (F1.6, AGC ON), B/W: 0 Lux with IR
Slow Shutter	Yes
P/N	P/N
Wide Dynamic Range	120 dB
Day & Night	IR cut filter
Angle Adjustment	Pan: 0° to 355°, tilt: 0° to 75°, rotate: 0° to 355°
Lens	
Lens Type	Fixed focal lens, 2.8 and 4 mm optional
Focal Length & FOV	2.8 mm, horizontal FOV 111°, vertical FOV 59°, diagonal FOV 131° 4 mm, horizontal FOV 87°, vertical FOV 47°, diagonal FOV 102°
Lens Mount	M12
Iris Type	Fixed
Aperture	F1.6
Working Distance	2.8 mm: 2.6 m to ∞ 4 mm: 3.2 m to ∞
DORI	
DORI	2.8 mm: D: 89.2 m, O: 35.4 m, R: 17.8 m, I: 8.9 m 4 mm: D: 99.4 m, O: 39.4 m, R: 19.9 m, I: 9.9 m
Illuminator	
Supplement Light Type	IR
Smart Supplement Light	Yes
IR IR Wavelength	850 nm
IR Range	Up to 30 m
Video	
Max. Resolution	3840 × 2160
Main Stream	50 Hz: 25 fps (3840 × 2160, 3200 × 1800, 2688 × 1520, 1920 × 1080, 1280 × 720) 60 Hz: 24 fps (3840 × 2160) 30 fps (3200 × 1800, 2688 × 1520, 1920 × 1080, 1280 × 720)
Sub-Stream	50 Hz: 25 fps (1280 × 720, 640 × 480, 640 × 360) 60 Hz: 30 fps (1280 × 720, 640 × 480, 640 × 360)
Third Stream	50 Hz: 10 fps (1920 × 1080, 1280 × 720, 640 × 480, 640 × 360) 60 Hz: 10 fps (1920 × 1080, 1280 × 720, 640 × 480, 640 × 360) *Third stream is supported under certain settings.
Video Compression	Main stream: H.265/H.264/H.264+/H.265+ Sub-stream: H.265/H.264/MJPEG Third stream: H.265/H.264 *Third stream is supported under certain settings.
Video Bit Rate	32 Kbps to 16 Mbps
H.264 Type	Baseline Profile/Main Profile/High Profile
H.265 Type	Main Profile
H.264+	Main stream supports

H.265+	Main stream supports
Bit Rate Control	CBR/VBR
Scalable Video Coding (SVC)	H.264 and H.265 encoding
Region of Interest (ROI)	1 fixed region for main stream and sub-stream
Audio	
Audio Type	-U: mono sound
Environment Noise Filtering	-U: Yes
Audio Sampling Rate	-U: 8 kHz/16 kHz/32 kHz/44.1 kHz/48 kHz
Audio Compression	-U: G.711ulaw/G.711alaw/G.722.1/G.726/MP2L2/PCM/MP3/AAC-LC
Audio Bit Rate	-U: 64 Kbps (G.711ulaw/G.711alaw)/16 Kbps (G.722.1)/16 Kbps (G.726)/32 to 192 Kbps (MP2L2)/8 to 320 Kbps (MP3)/16 to 64 Kbps (AAC-LC)
Network	
Simultaneous Live View	Up to 6 channels
API	Open Network Video Interface (PROFILE S, PROFILE G, PROFILE T), ISAPI, SDK
Protocols	TCP/IP, ICMP, HTTP, HTTPS, FTP, DHCP, DNS, DDNS, RTP, RTSP, NTP, UPnP, SMTP, IGMP, 802.1X, QoS, IPv4, IPv6, UDP, Bonjour, SSL/TLS, PPPoE, SNMP, ARP, WebSocket, WebSockets
User/Host	Up to 32 users. 3 user levels: administrator, operator and user
Security	Password protection, complicated password, HTTPS encryption, IP address filter, Security Audit Log, basic and digest authentication for HTTP/HTTPS, TLS 1.1/1.2, WSSE and digest authentication for Open Network Video Interface
Network Storage	NAS (NFS, SMB/CIFS), auto network replenishment (ANR) Together with high-end Hikvision memory card, memory card encryption and health detection are supported.
Client	iVMS-4200, Hik-Connect, Hik-Central
Web Browser	Plug-in required live view: IE 10, IE 11 Plug-in free live view: Chrome 57.0+, Firefox 52.0+, Edge 89+ Local service: Chrome 57.0+, Firefox 52.0+, Edge 89+
Image	
SNR	≥ 52 dB
Target Cropping	Yes
Day/Night Switch	Day, Night, Auto, Schedule
Image Enhancement	BLC, HLC, 3D DNR
Image Parameters Switch	Yes
Image Settings	Rotate mode, saturation, brightness, contrast, sharpness, gain, white balance adjustable by client software or web browser
Interface	
Ethernet Interface	1 RJ45 10 M/100 M self-adaptive Ethernet port
On-Board Storage	Built-in memory card slot, support microSD/SDHC/SDXC card, up to 512 GB
Built-in Microphone	-U: Yes
Audio	-S: 1 input (line in), max. input amplitude: 3.3 vpp, input impedance:4.7 KΩ, interface type: non-equilibrium; 1 output (line out), max. output amplitude: 3.3 vpp, output impedance: 100 Ω, interface type: non-equilibrium, mono sound
Alarm	-S: 1 input, 1 output (TTL: max. 12 VDC, 30 mA)

Reset Key	Yes
Event	
Basic Event	Motion detection (human and vehicle targets classification), video tampering alarm, exception -S: alarm input and output
Smart Event	Scene change detection
Deep Learning Function	
Face Capture	Yes
Perimeter Protection	Line crossing detection, intrusion detection, region entrance detection, region exiting detection Supports human and vehicle targets classification
General	
Material	Metal
Screw Material	SUS304
Dimension	Ø121.4 mm × 92.2 mm (Ø4.8" × 3.6")
Package Dimension	150 mm × 150 mm × 141 mm (5.9" × 5.9" ×5.6")
Weight	Approx. 590 g (1.3 lb.)
With Package Weight	Approx. 850 g (1.9 lb.)
Storage Conditions	-30 °C to 60 °C (-22 °F to 140 °F). Humidity 95% or less (non-condensing)
Startup and Operating Conditions	-30 °C to 60 °C (-22 °F to 140 °F). Humidity 95% or less (non-condensing)
Linkage Method	Upload to FTP/memory card/NAS, notify surveillance center, send email, trigger recording, trigger capture -S: trigger alarm output, audible warning
Firmware Version	V5.5.112
Power Consumption and Current	12 VDC, 0.5 A, max. 6 W PoE (802.3af, 36 V to 57 V), 0.25 A to 0.15 A, max. 7.5 W
Power Supply	12 VDC ± 25% PoE: 802.3af, Class 3
Power Interface	Ø5.5 mm coaxial power plug
Language	33 languages English, Russian, Estonian, Bulgarian, Hungarian, Greek, German, Italian, Czech, Slovak, French, Polish, Dutch, Portuguese, Spanish, Romanian, Danish, Swedish, Norwegian, Finnish, Croatian, Slovenian, Serbian, Turkish, Korean, Traditional Chinese, Thai, Vietnamese, Japanese, Latvian, Lithuanian, Portuguese (Brazil), Ukrainian
General Function	Anti-flicker, heartbeat, mirror, privacy mask, flash log, password reset via email, pixel counter
Software Reset	Yes
Approval	
EMC	FCC (47 CFR Part 15, Subpart B); CE-EMC (EN 55032: 2015, EN 61000-3-2: 2014, EN 61000-3-3: 2013, EN 50130-4: 2011 +A1: 2014); RCM (AS/NZS CISPR 32: 2015); KC (KN 32: 2015, KN 35: 2015)

Safety	UL (UL 60950-1); CB (IEC 60950-1:2005 + Am 1:2009 + Am 2:2013, IEC 62368-1:2014); CE-LVD (EN 60950-1:2005 + Am 1:2009 + Am 2:2013, IEC 62368-1:2014)
Environment	CE-RoHS (2011/65/EU); WEEE (2012/19/EU); Reach (Regulation (EC) No 1907/2006)
Protection	IP67 (IEC 60529-2013), IK10 (IEC 62262:2002)

▪ Available Model

DS-2CD2186G2-I (2.8/4 mm)

DS-2CD2186G2-ISU (2.8/4 mm)

DS-2CD2186G2-ISU (2.8 mm) (Black)

▪ Dimension

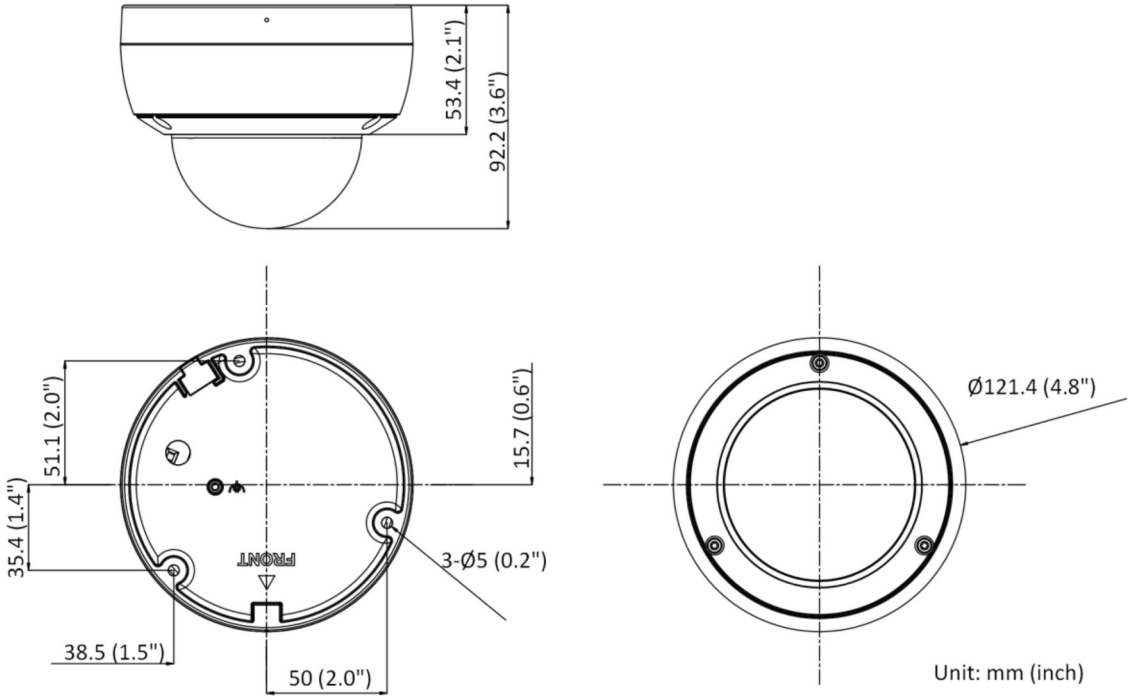

▪ Accessory

▪ Optional

DS-1275ZJ-SUS Vertical Pole Mount	DS-1272ZJ-120B Wall Mount	DS-1276ZJ-SUS Corner Mount	DS-1280ZJ-DM46 Junction Box	DS-1271ZJ-120 Pendant Mount
				

DS-1253ZJ-M Rain Shade	DS-1272ZJ-120 Wall Mount
	

Distributed by

HIKVISION

Headquarters
No.555 Qianmo Road, Binjiang District,
Hangzhou 310051, China
T +86-571-8807-5998
overseasbusiness@hikvision.com

Hikvision USA
T +1-909-895-0400
sales.usa@hikvision.com

Hikvision Europe
T +31-23-5542770
sales.eu@hikvision.com

Hikvision UK & Ireland
T +01628-902140
sales.uk@hikvision.com

Hikvision UAE
T +971-4-4432090
salesme@hikvision.com

Hikvision Russia
T +7-495-669-67-99
saleru@hikvision.com

Hikvision Australia
T +61-2-8599-4233
salesau@hikvision.com

Hikvision Italy
T +39-0438-6902
info.it@hikvision.com

Hikvision South Africa
Tel: +27 (10) 0351172
sale.africa@hikvision.com

Hikvision Singapore
T +65-6684-4718
sg@hikvision.com

Hikvision Korea
T +82-(0)31-731-8817
sales.korea@hikvision.com

Hikvision India
T +91-22-28469900
sales@pramahikvision.com

Hikvision Brazil
T +55 11 3318-0050
Latam.support@hikvision.com

Hikvision France
T +33(0)1-85-330-450
info.fr@hikvision.com

Hikvision Spain
T +34-91-737-16-55
info.es@hikvision.com

Hikvision Poland
T +48-22-460-01-50
info.pl@hikvision.com

Hikvision Canada
T +1-866-200-6690
sales.canada@hikvision.com

Hikvision Turkey
T +90 (216)521 7070- 7074
sales.tr@hikvision.com

Hikvision Kazakhstan
T +7-727-9730667
nikia.panfilov@hikvision.ru

Hikvision Tashkent
T +99-87-1238-9438
uzb@hikvision.ru

Hikvision Indonesia
T +62-21-2933759
Sales.Indonesia@hikvision.com

Hikvision Thailand
T +662-275-9949
sales.thailand@hikvision.com

Hikvision Malaysia
T +601-7652-2413
sales.my@hikvision.com

Hikvision Vietnam
T +84-974270888
sales.vt@hikvision.com

Hikvision Hong Kong
T +852-2151-1761
info.hk@hikvision.com

Hikvision Colombia
sales.colombia@hikvision.com

© Hikvision Digital Technology Co., Ltd. 2020 | Data subject to change without notice |